Practice worksheet | Circles, area and volume

Volume of composite objects

Name: _____ Date: _____

10 questions | 35 marks

1. Find the volume of the stepped block. Use the dashed split. [3 marks]

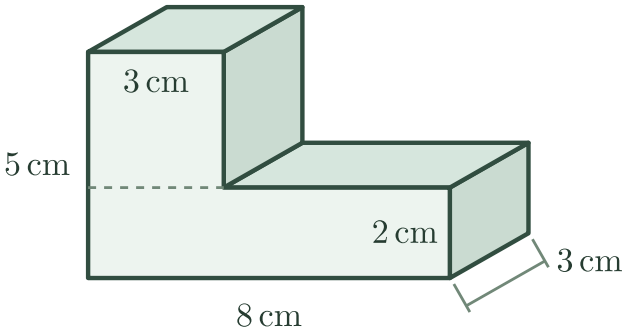

2. Find the volume of this block by splitting it into two side-by-side columns. [3 marks]

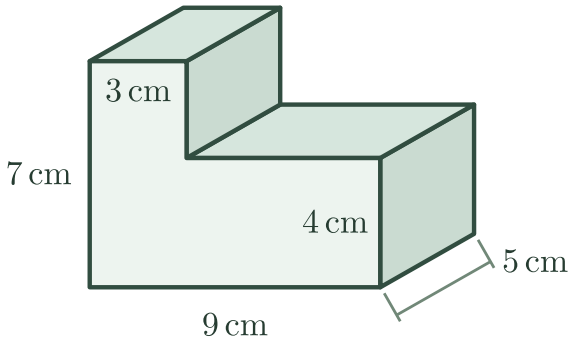

3. A groove runs all the way along the top. Find the volume of material remaining. [3 marks]

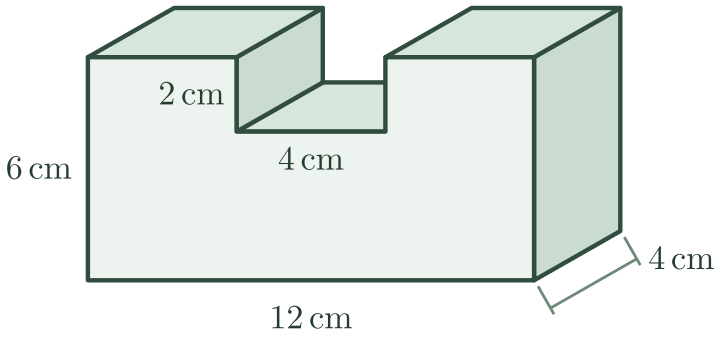

4. The front face has a rectangular wall section and a triangular roof section. Find the volume of the whole prism. [3 marks]

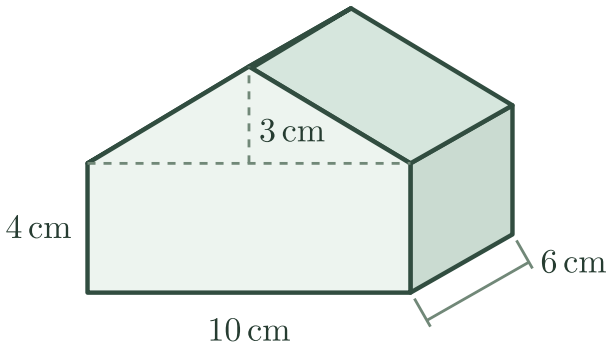

5. These are the internal dimensions of a stepped planter. How many litres of soil fill it to its two rims? [4 marks]

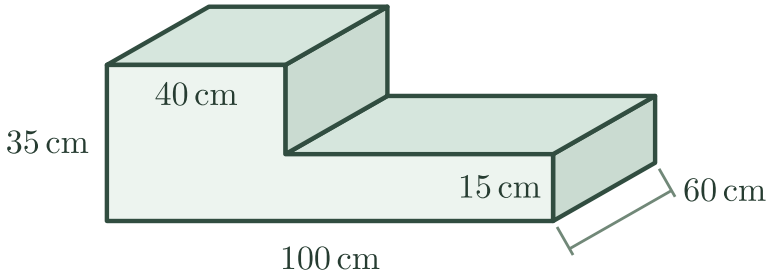

6. The top view shows two solid blocks standing on the same base level. Their backs finish at different places. Find their combined volume. [3 marks]

Top view: vertical heights inside each block

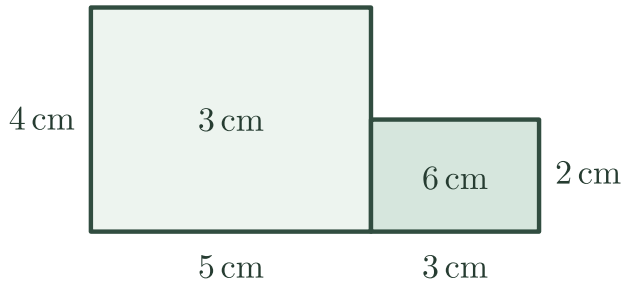

7. How much material is in this rectangular tube? Use both views to distinguish the material from the empty tunnel. [3 marks]

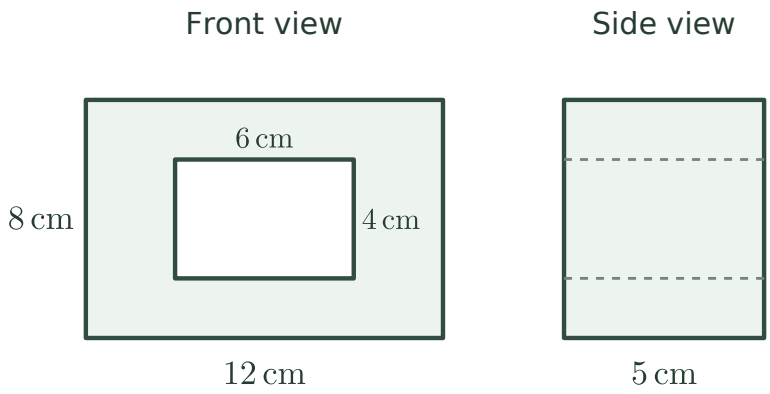

8. The stepped block contains 215 cm³. Find the additional height marked x above the lower step. [4 marks]

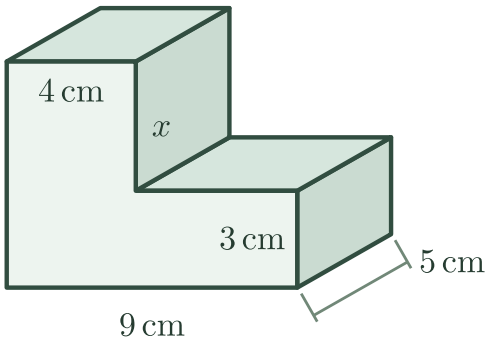

9. Use the three columns to find the volume of the solid staircase. The heights shown are measured from the base. [4 marks]

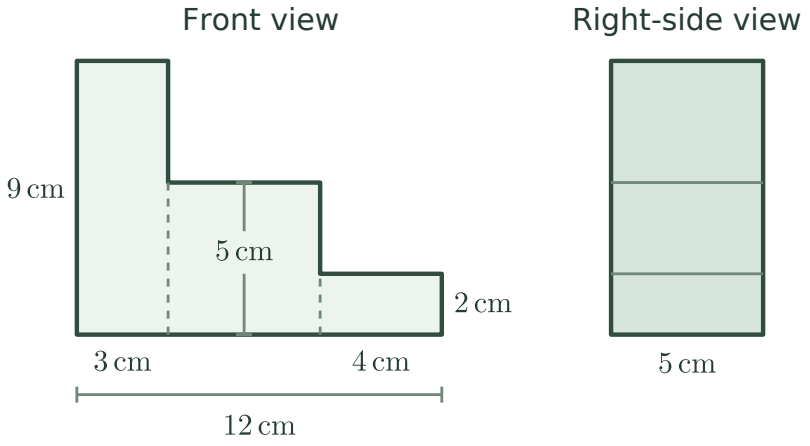

10. A maker cuts the central recess shown in the two views. Work out the volume of material left and explain why using the full block height for the cut would give the wrong result.
[5 marks]

Top view

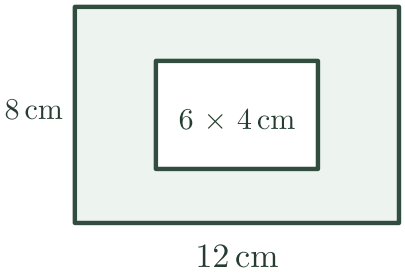

Section through the centre

