Volume of composite objects

10 questions | 35 marks

Equivalent correct methods earn the corresponding marks.

1. Find the volume of the stepped block. Use the dashed split. [3 marks]

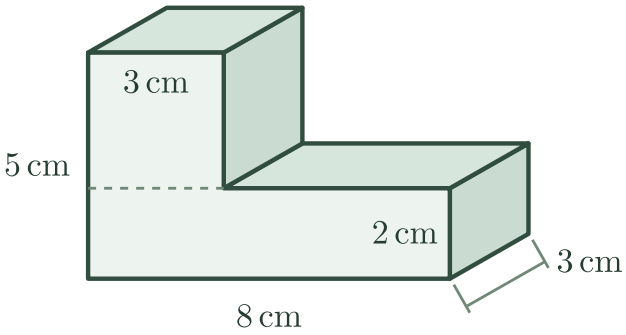

Base: $8 \times 2 \times 3 = 48$ cm³.

Upper piece: $3 \times (5 - 2) \times 3 = 27$ cm³. Total: $48 + 27 = 75$ cm³.

Answer: 75 cm³.

2. Find the volume of this block by splitting it into two side-by-side columns. [3 marks]

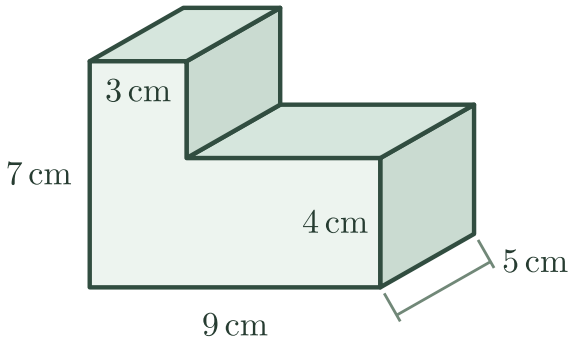

The taller column has volume $3 \times 7 \times 5 = 105$ cm³.

The other column is $9 - 3 = 6$ cm wide. Its volume is $6 \times 4 \times 5 = 120$ cm³.

Total: $105 + 120 = 225$ cm³.

Answer: 225 cm³.

3. A groove runs all the way along the top. Find the volume of material remaining. [3 marks]

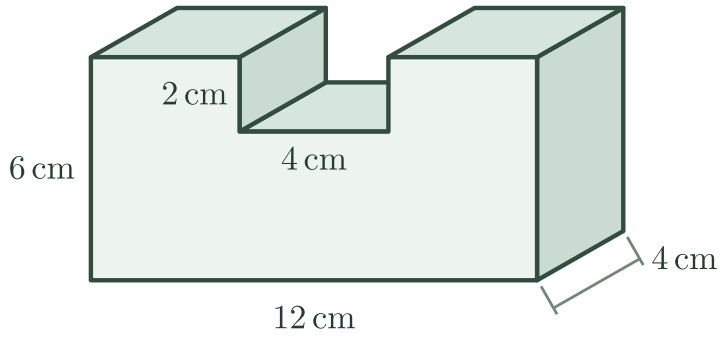

Complete block: $12 \times 6 \times 4 = 288$ cm³.

Removed strip: $4 \times 2 \times 4 = 32$ cm³. Remaining: $288 - 32 = 256$ cm³.

Answer: 256 cm³.

4. The front face has a rectangular wall section and a triangular roof section. Find the volume of the whole prism. [3 marks]

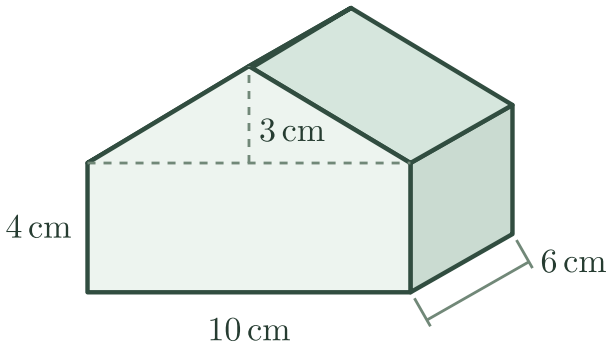

Rectangle area: $10 \times 4 = 40$ cm².

Triangle area: $\frac{1}{2} \times 10 \times 3 = 15$ cm². The dashed height is perpendicular to its base.

Volume: $(40 + 15) \times 6 = 330$ cm³.

Answer: 330 cm³.

5. These are the internal dimensions of a stepped planter. How many litres of soil fill it to its two rims? [4 marks]

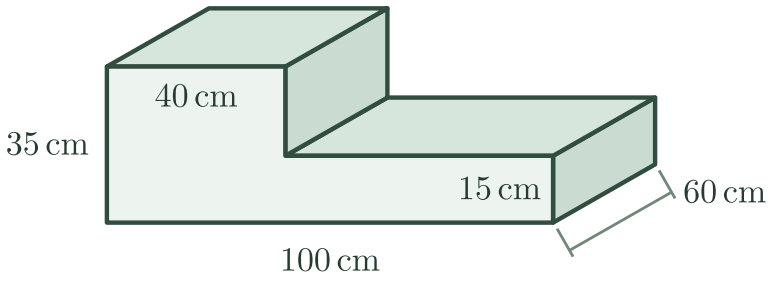

The front area is $100 \times 15 + 40 \times (35 - 15) = 2300$ cm².

Soil volume is $2300 \times 60 = 138000$ cm³. There are 1000 cm³ in a litre, giving 138 L.

Answer: 138 L.

6. The top view shows two solid blocks standing on the same base level. Their backs finish at different places. Find their combined volume. [3 marks]

Top view: vertical heights inside each block

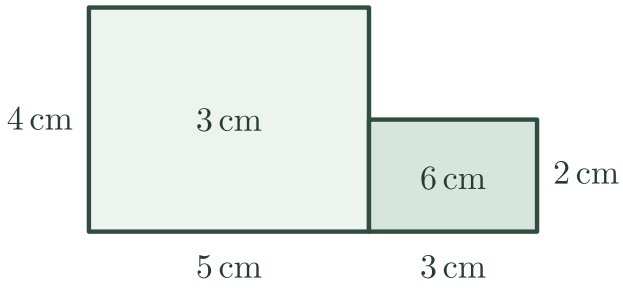

The left block has volume $5 \times 4 \times 3 = 60$ cm³.

The right block has volume $3 \times 2 \times 6 = 36$ cm³. The footprints touch without overlapping, so add: $60 + 36 = 96$ cm³.

Answer: 96 cm³.

7. How much material is in this rectangular tube? Use both views to distinguish the material from the empty tunnel. [3 marks]

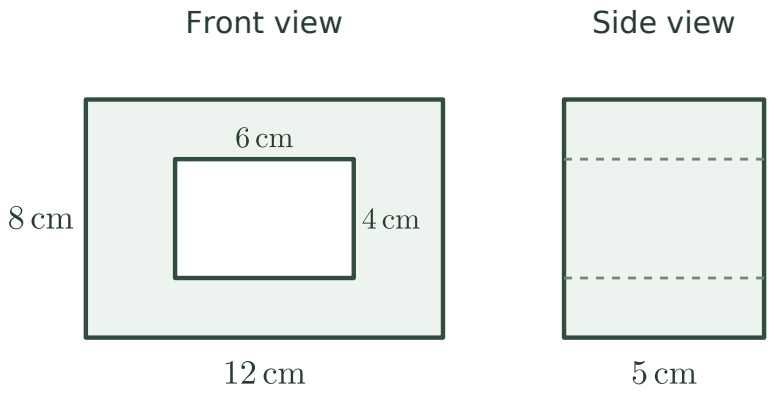

Outer end area: $12 \times 8 = 96$ cm². The opening has area $6 \times 4 = 24$ cm².

The wall material has cross-sectional area $96 - 24 = 72$ cm². Its volume is $72 \times 5 = 360$ cm³.

Answer: 360 cm³.

8. The stepped block contains 215 cm³. Find the additional height marked x above the lower step. [4 marks]

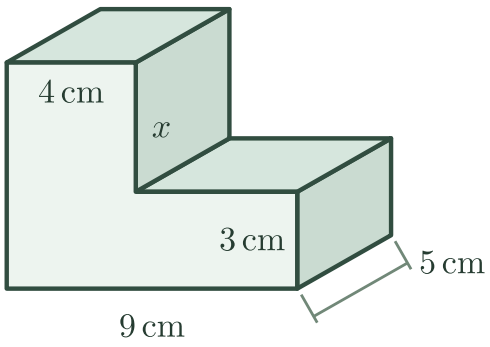

The base occupies $9 \times 3 \times 5 = 135$ cm³, leaving $215 - 135 = 80$ cm³ in the upper piece.

The upper footprint has area $4 \times 5 = 20$ cm². Its height is $80 \div 20 = 4$ cm.

Answer: 4 cm.

9. Use the three columns to find the volume of the solid staircase. The heights shown are measured from the base. [4 marks]

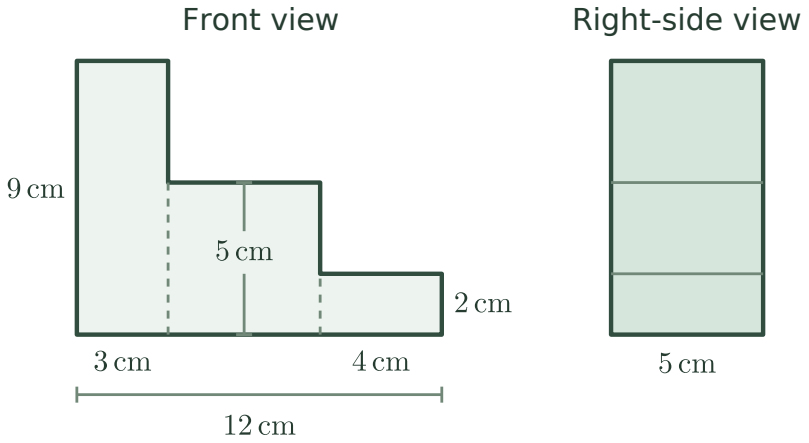

The centre column is $12 - 3 - 4 = 5$ cm wide.

End areas of the columns: $3 \times 9 = 27$, $5 \times 5 = 25$ and $4 \times 2 = 8$ cm².

The total end area is 60 cm². Volume is $60 \times 5 = 300$ cm³.

Answer: 300 cm³.

10. A maker cuts the central recess shown in the two views. Work out the volume of material left and explain why using the full block height for the cut would give the wrong result. [5 marks]

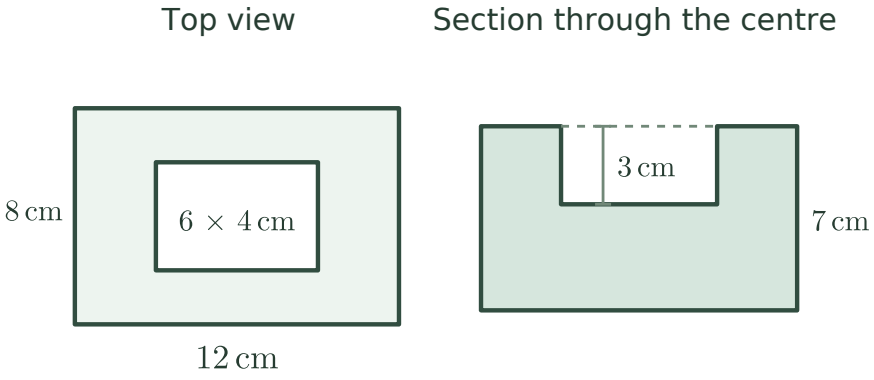

The solid outside block would occupy $12 \times 8 \times 7 = 672$ cm³.

Only $6 \times 4 \times 3 = 72$ cm³ is removed. The section shows a floor below the cavity.

Volume left: $672 - 72 = 600$ cm³. Using 7 cm for the cut would remove the floor as well.

Answer: 600 cm³. The recess stops 3 cm below the top.