Practice worksheet | Perimeter, area and volume

Area of composite shapes

Name: _____ Date: _____

12 questions | 30 marks

1. Find the area of this L-shaped tile by adding the two parts of the marked split. [2 marks]

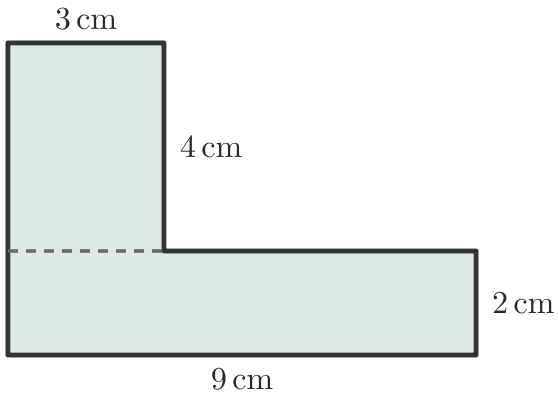

2. This mat began as a rectangle. What is its area after the corner was removed? [2 marks]

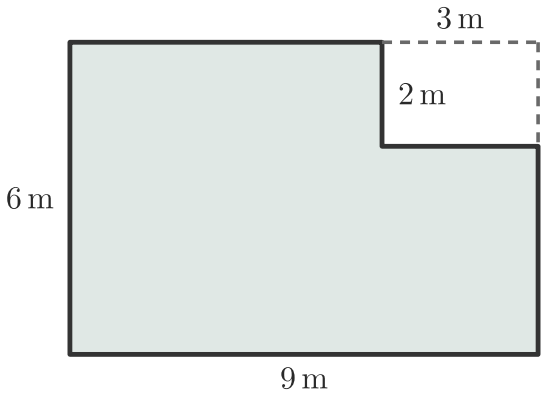

3. Find the area of the badge by splitting it along its dashed base line. [2 marks]

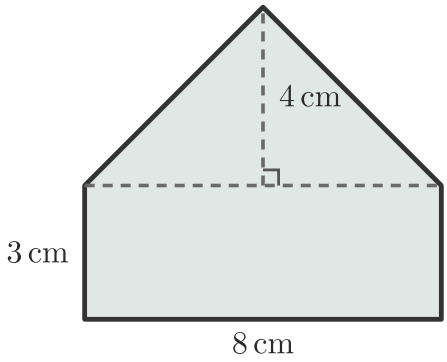

4. The display stand has a rectangular top bar and a rectangular stem. Find the area of its front. [2 marks]

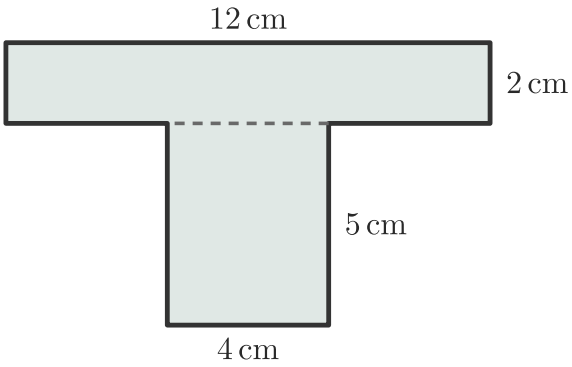

5. Find the floor area of the U-shaped gallery. The recess opens to the outside. [2 marks]

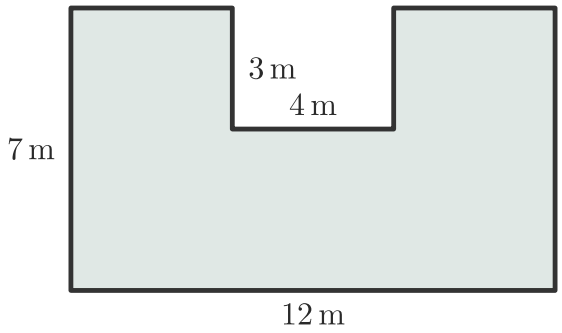

6. Find the painted area of the panel after the diagonal piece has been cut away. [2 marks]

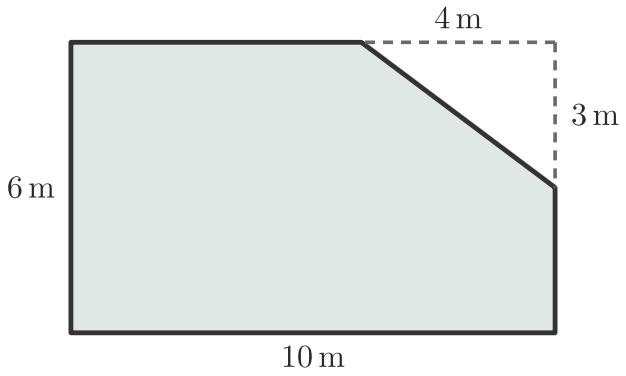

7. Find the area in two ways. Mark a possible split for the first method, then check using the missing corner. [3 marks]

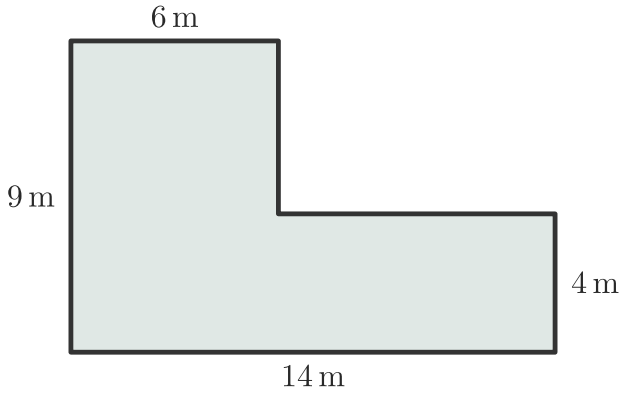

8. A path surrounds a rectangular planting bed. The path is the same width all the way round. Use the plan to find the area of the path. [3 marks]

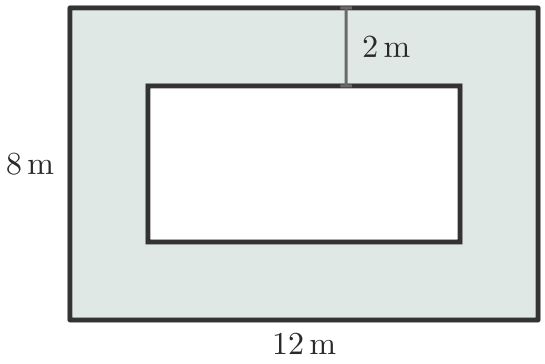

9. The three levels share the same bottom edge. Find the total area of this stepped platform. [3 marks]

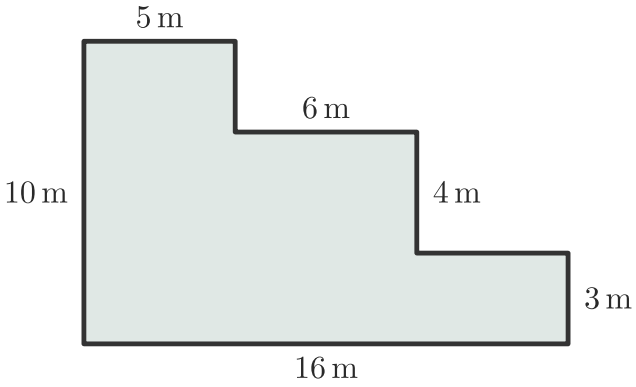

10. Find the area of the stage backdrop in square metres. The height on the right measures from the floor to the peak. [3 marks]

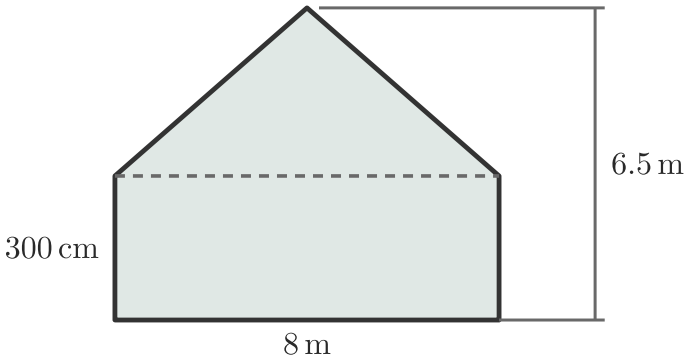

11. The T-shaped sign has total area 54 cm². Find the height of its stem, from the base up to the underside of the top bar. [3 marks]

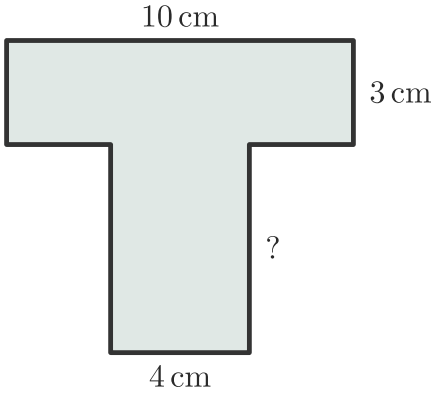

12. A fabric gate panel has a triangular top and a rectangular opening cut into the lower edge. Find the area of fabric required. [3 marks]

