Area of composite shapes

12 questions | 30 marks

Equivalent correct methods earn the corresponding marks.

1. Find the area of this L-shaped tile by adding the two parts of the marked split. [2 marks]

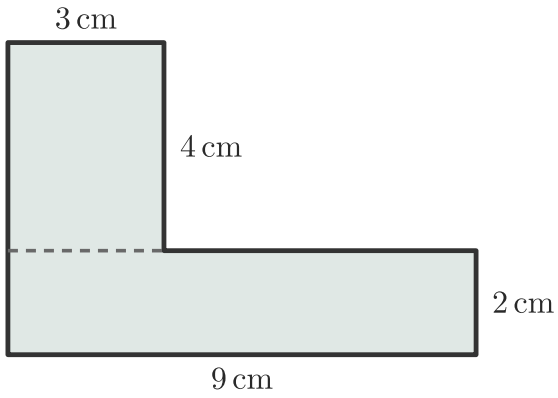

The lower strip covers $9 \times 2 = 18$ cm².

The upper part adds $3 \times 4 = 12$ cm². Total $18 + 12 = 30$ cm².

Answer: 30 cm²

2. This mat began as a rectangle. What is its area after the corner was removed? [2 marks]

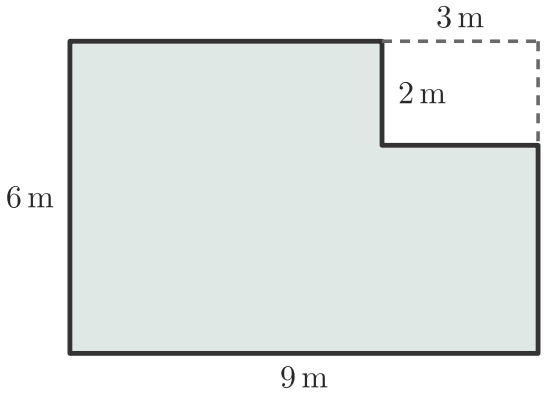

The full rectangle covers $9 \times 6 = 54$ m².

Subtract $3 \times 2 = 6$ m² for the missing corner: $54 - 6 = 48$ m².

Answer: 48 m²

3. Find the area of the badge by splitting it along its dashed base line. [2 marks]

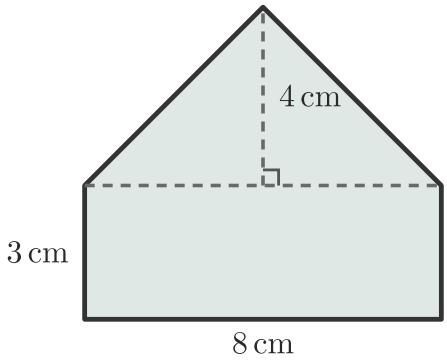

Rectangle: $8 \times 3 = 24$ cm². Triangle: $\frac{1}{2} \times 8 \times 4 = 16$ cm².

The pieces meet edge to edge, so their combined area is $24 + 16 = 40$ cm².

Answer: 40 cm²

4. The display stand has a rectangular top bar and a rectangular stem. Find the area of its front. [2 marks]

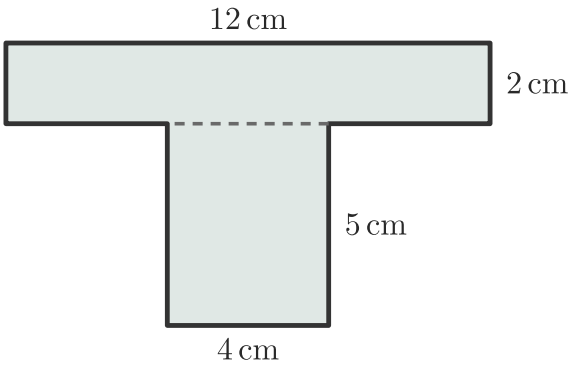

Top bar: $12 \times 2 = 24$ cm². Stem: $4 \times 5 = 20$ cm².

Together they occupy $24 + 20 = 44$ cm².

Answer: 44 cm²

5. Find the floor area of the U-shaped gallery. The recess opens to the outside. [2 marks]

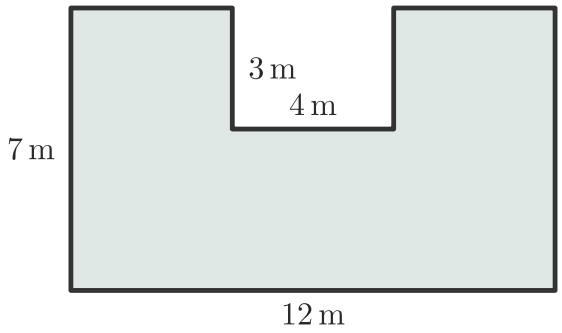

Across its outside edges the floor would cover $12 \times 7 = 84$ m².

Subtract the recess: $84 - 4 \times 3 = 72$ m².

Answer: 72 m²

6. Find the painted area of the panel after the diagonal piece has been cut away. [2 marks]

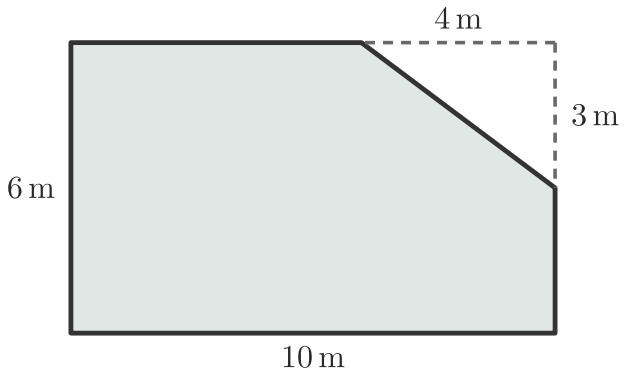

Complete the outer rectangle: $10 \times 6 = 60$ m².

The missing triangle has area $\frac{1}{2} \times 4 \times 3 = 6$ m². Painted area $60 - 6 = 54$ m².

Answer: 54 m²

7. Find the area in two ways. Mark a possible split for the first method, then check using the missing corner. [3 marks]

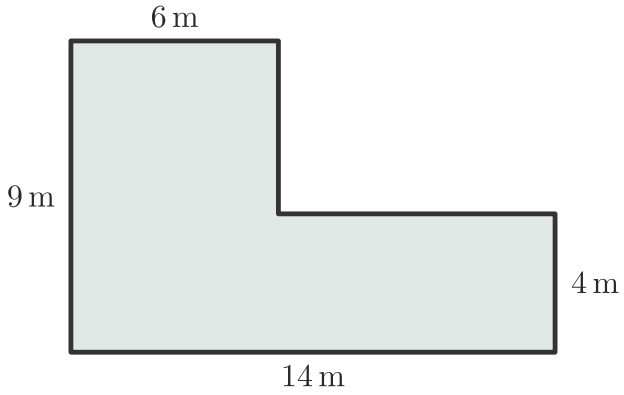

Split horizontally: $14 \times 4 + 6 \times (9 - 4) = 56 + 30 = 86$ m².

Complete the rectangle: $14 \times 9 - (14 - 6) \times (9 - 4) = 126 - 40 = 86$ m².

Answer: 86 m²

8. A path surrounds a rectangular planting bed. The path is the same width all the way round. Use the plan to find the area of the path. [3 marks]

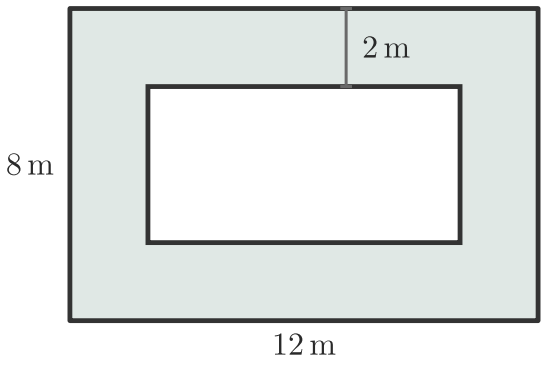

Outer area: $12 \times 8 = 96$ m².

Bed dimensions: $12 - 2(2) = 8$ m and $8 - 2(2) = 4$ m.

Path only: $96 - 8 \times 4 = 64$ m².

Answer: 64 m²

9. The three levels share the same bottom edge. Find the total area of this stepped platform. [3 marks]

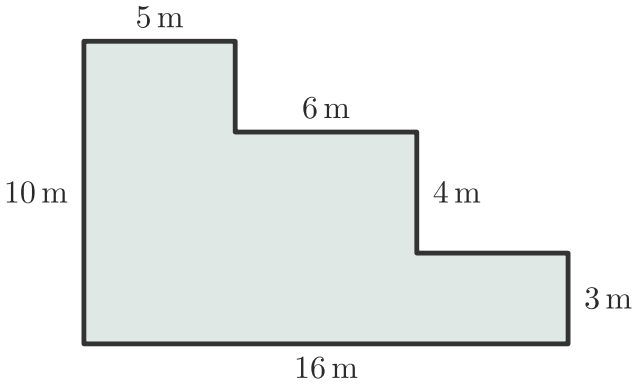

Right-hand width: $16 - 5 - 6 = 5$ m. The middle level is $3 + 4 = 7$ m high.

Using three vertical rectangles, the area is $5 \times 10 + 6 \times 7 + 5 \times 3 = 50 + 42 + 15 = 107$ m².

Answer: 107 m²

10. Find the area of the stage backdrop in square metres. The height on the right measures from the floor to the peak. [3 marks]

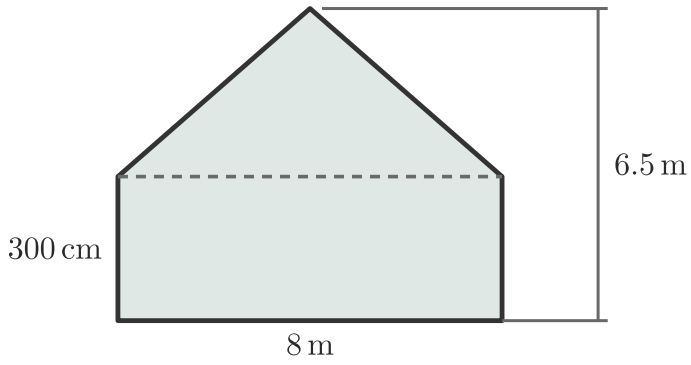

The rectangular section is 300 cm $= 3$ m high; the triangular height is $6.5 - 3 = 3.5$ m.

Rectangle: $8 \times 3 = 24$ m². Triangle: $\frac{1}{2} \times 8 \times 3.5 = 14$ m².

Total $24 + 14 = 38$ m².

Answer: 38 m²

11. The T-shaped sign has total area 54 cm². Find the height of its stem, from the base up to the underside of the top bar. [3 marks]

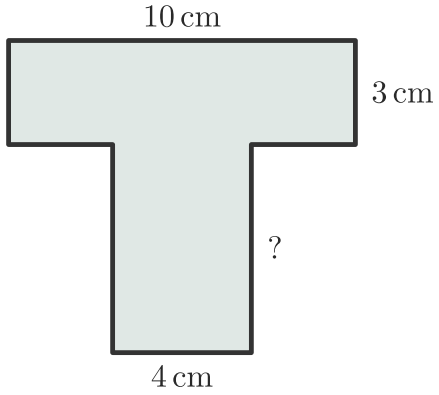

The bar occupies $10 \times 3 = 30$ cm², leaving $54 - 30 = 24$ cm² for the stem.

The stem is 4 cm wide. Its height is $24 \div 4 = 6$ cm.

Answer: 6 cm

12. A fabric gate panel has a triangular top and a rectangular opening cut into the lower edge. Find the area of fabric required. [3 marks]

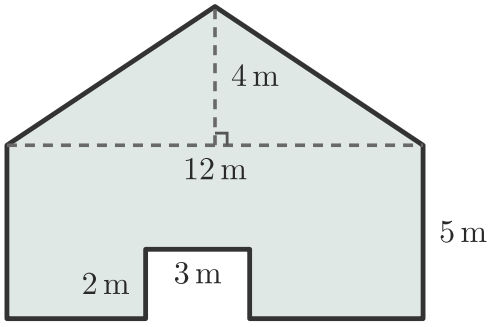

Before cutting the opening, the rectangular part covers $12 \times 5 = 60$ m² and the triangular top covers $\frac{1}{2} \times 12 \times 4 = 24$ m².

The opening takes away $3 \times 2 = 6$ m². Fabric required: $60 + 24 - 6 = 78$ m².

Answer: 78 m²